Substation Relay Protection Overview NWPPA E&O Conference 2016

Presenter: Dave Maehl, P.E.
Electrical Consultants Inc.

ECI
ELECTRICAL CONSULTANTS, INC.

Presentation Overview

- Faults
- Relays
- Instrument Transformers
- Correlation to Drawings
  - One Lines
  - AC Schematics
  - DC Schematics
- Other Types of Protection
- Coordination of Relays

ECI ELECTRICAL CONSULTANTS, INC.

Purpose of Protective Relaying

- *Protect Personnel*
- *Protect Equipment*
- *Isolate Fault to Smallest Affected Area*

ECI
ELECTRICAL CONSULTANTS, INC.

Relay Operation

1) Trip during fault
2) Trip during overload
3) Trip during over/under voltage
4) Trip during over/under frequency

Relay Operation

5) Don't trip during inrush
6) Don't trip during cold load restoration
7) Don't trip during "normal" conditions

How do Relays Recognize Faults?

- *Abnormal Current*
- *Abnormal Voltage*
- *Abnormal Frequency*
- *Combination of any of the Above*

ECI
ELECTRICAL CONSULTANTS, INC.

What does a fault look like to a Relay?

ECI
ELECTRICAL CONSULTANTS, INC.

SEL-5601

Event Time: 6/23/2008 15:44:35.195

FID=SEL-311B-R106-V0-Z003002-D20050114

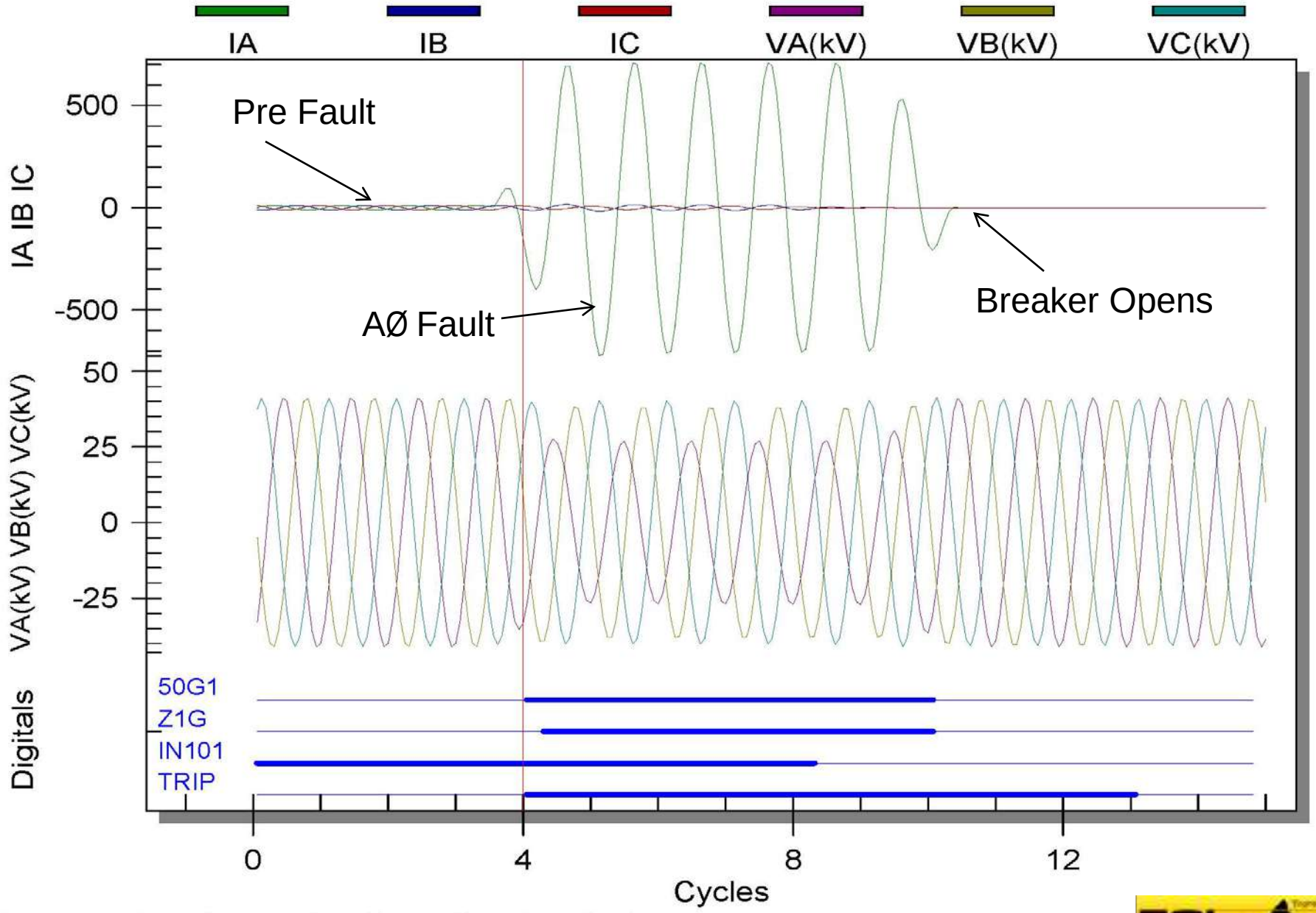

ig Horn Electric Coop\Yellowtail Substation\YELLOWTAIL EVENTS 062508\

ECI ELECTRICAL CONSULTANTS, INC.

Types of Typical Faults

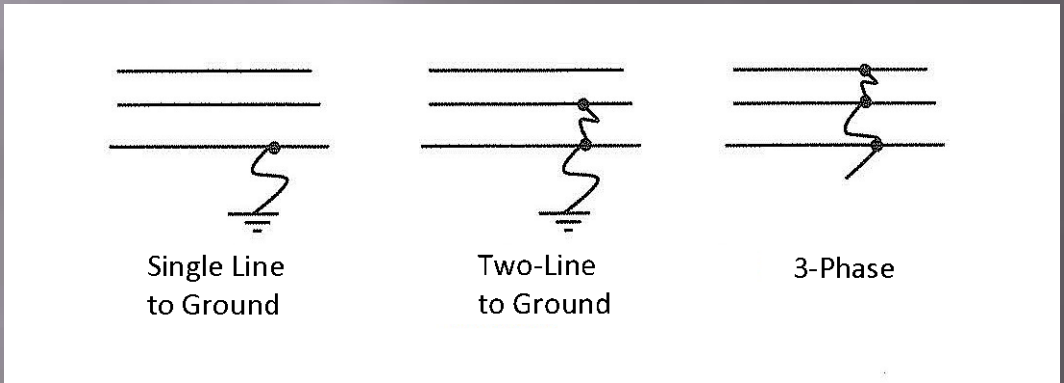

ECI
ELECTRICAL CONSULTANTS, INC.

Cause of Faults

- *Grounding Cables*
- *Trees*
- *Splices*
- *Terminations*
- *Weather*

ECI
ELECTRICAL CONSULTANTS, INC.

Simplified Overall System Schematic (Radial System)

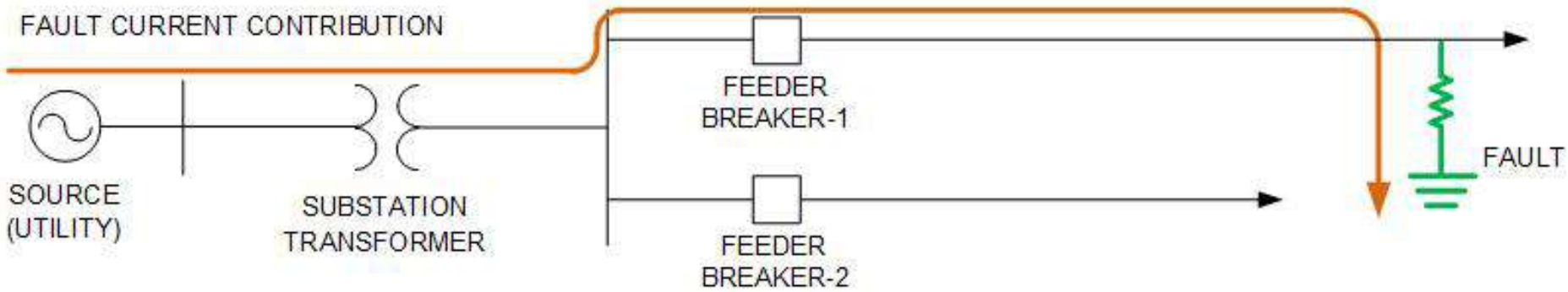

Looped System

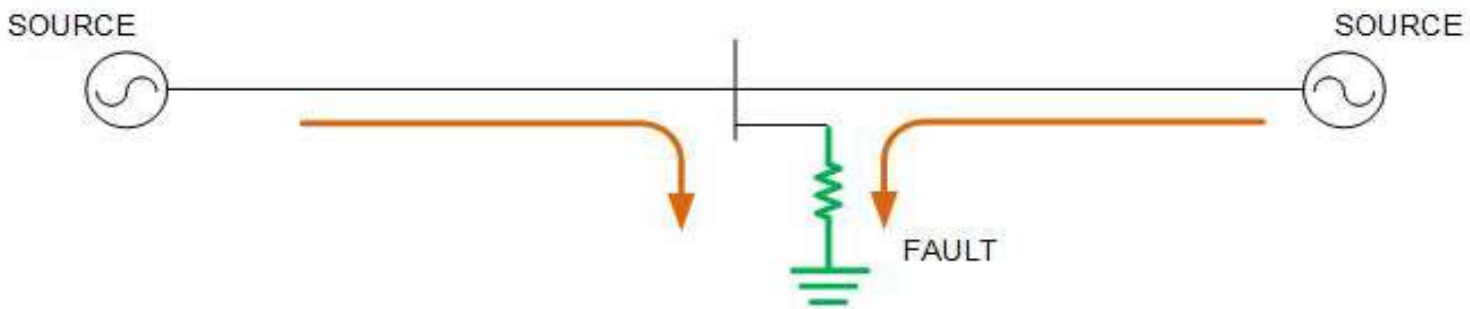

What is a Relay

- *Continuously Monitors Power System*
- *Sends a signal to Trip Circuit Breaker or Recloser during abnormal conditions (faults)*

ECI ELECTRICAL CONSULTANTS, INC.

Common Types of Relays Located in Substation

- *Line (Distance and Differential)*
- *Transformer (Differential)*
- *Bus (Differential)*
- *Feeder (Overcurrent)*

ECI ELECTRICAL CONSULTANTS, INC.

Line

Transformer Differential

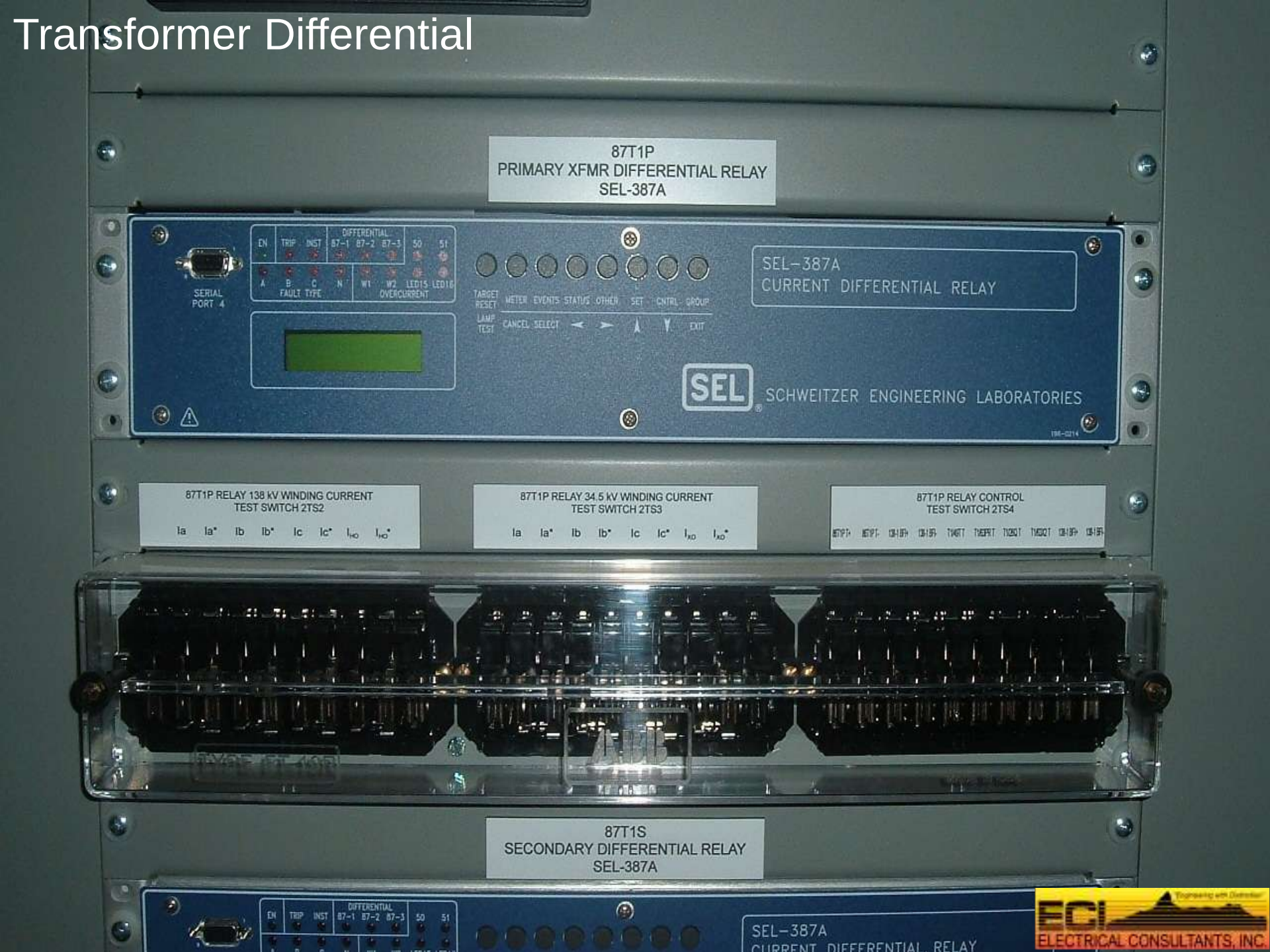

Bus Differential

Relay Testing

ECI
ELECTRICAL CONSULTANTS, INC.

ECI
ELECTRICAL CONSULTANTS, INC.

How to Measure Current, Voltage and Frequency :

Instrument Transformers

- PTs
- CTs

ECI
ELECTRICAL CONSULTANTS, INC.


CT
CT
ECI
ELECTRICAL CONSULTANTS, INC.


CT
CT
ECI
ELECTRICAL CONSULTANTS, INC.

Correlation to Drawings

One-line Diagrams

ECI
ELECTRICAL CONSULTANTS, INC.

Primary vs. Secondary

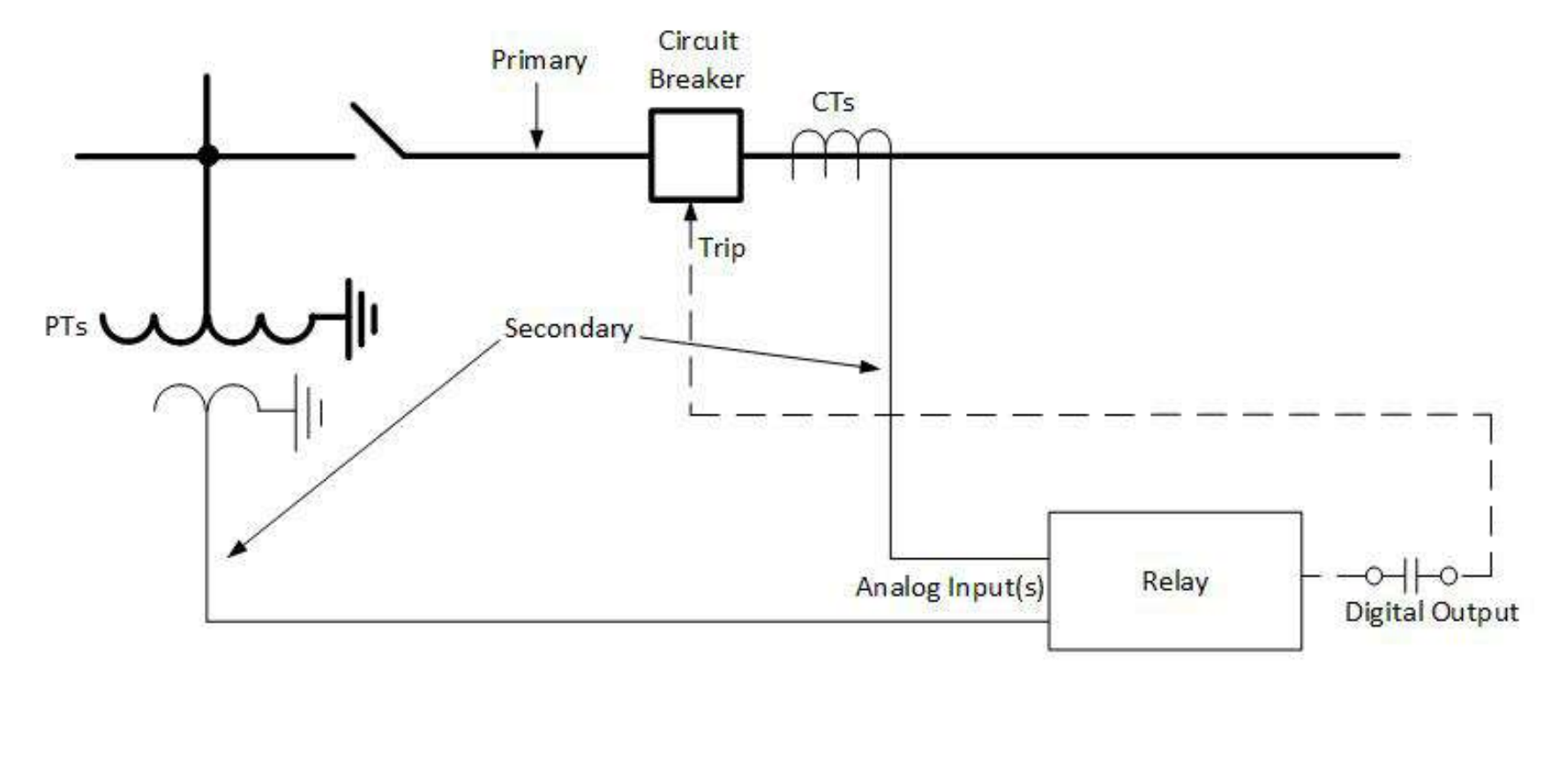

Line

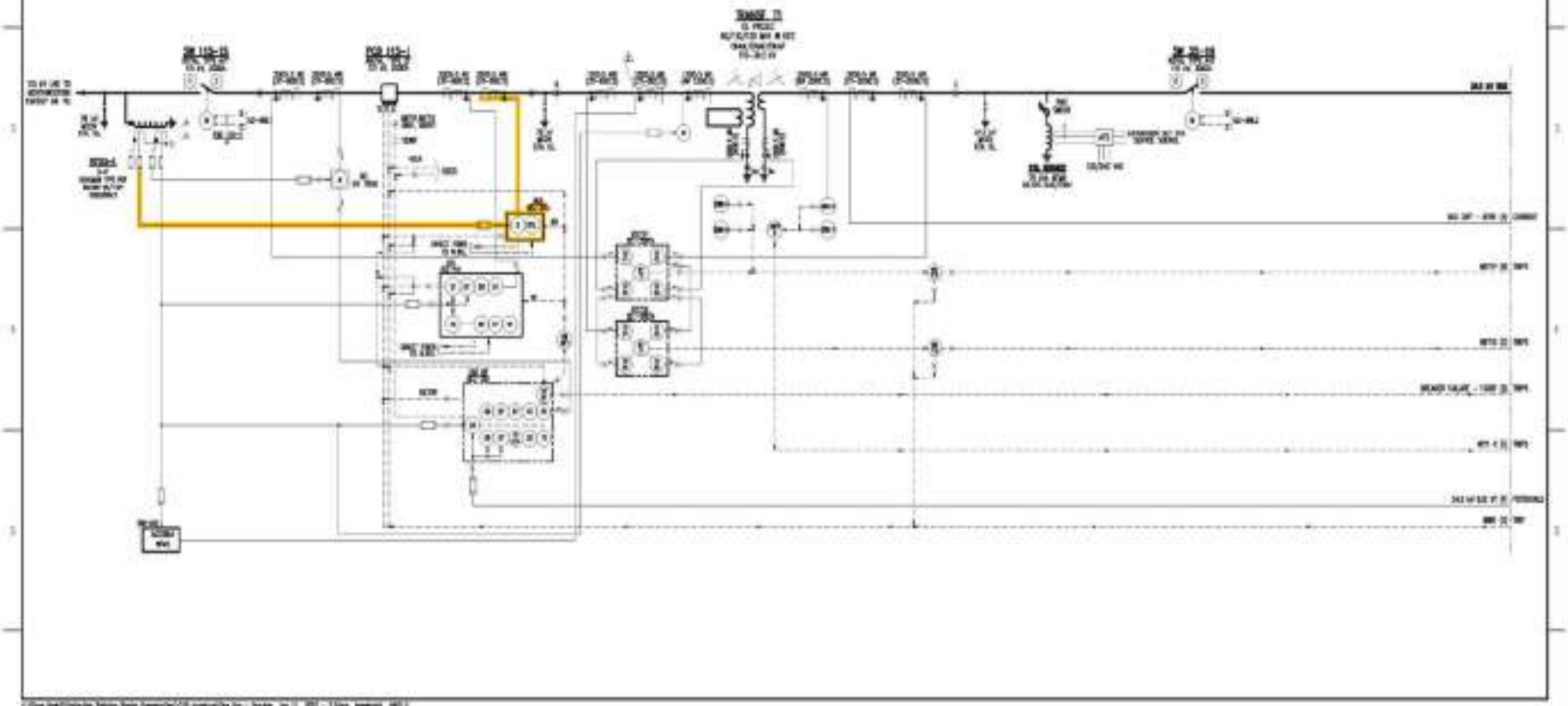

ECI ELECTRICAL CONSULTANTS INC

[redacted]

[redacted]

ONE L

ECI ELECTRICAL CONSULTANTS, INC.

Transformer Differential

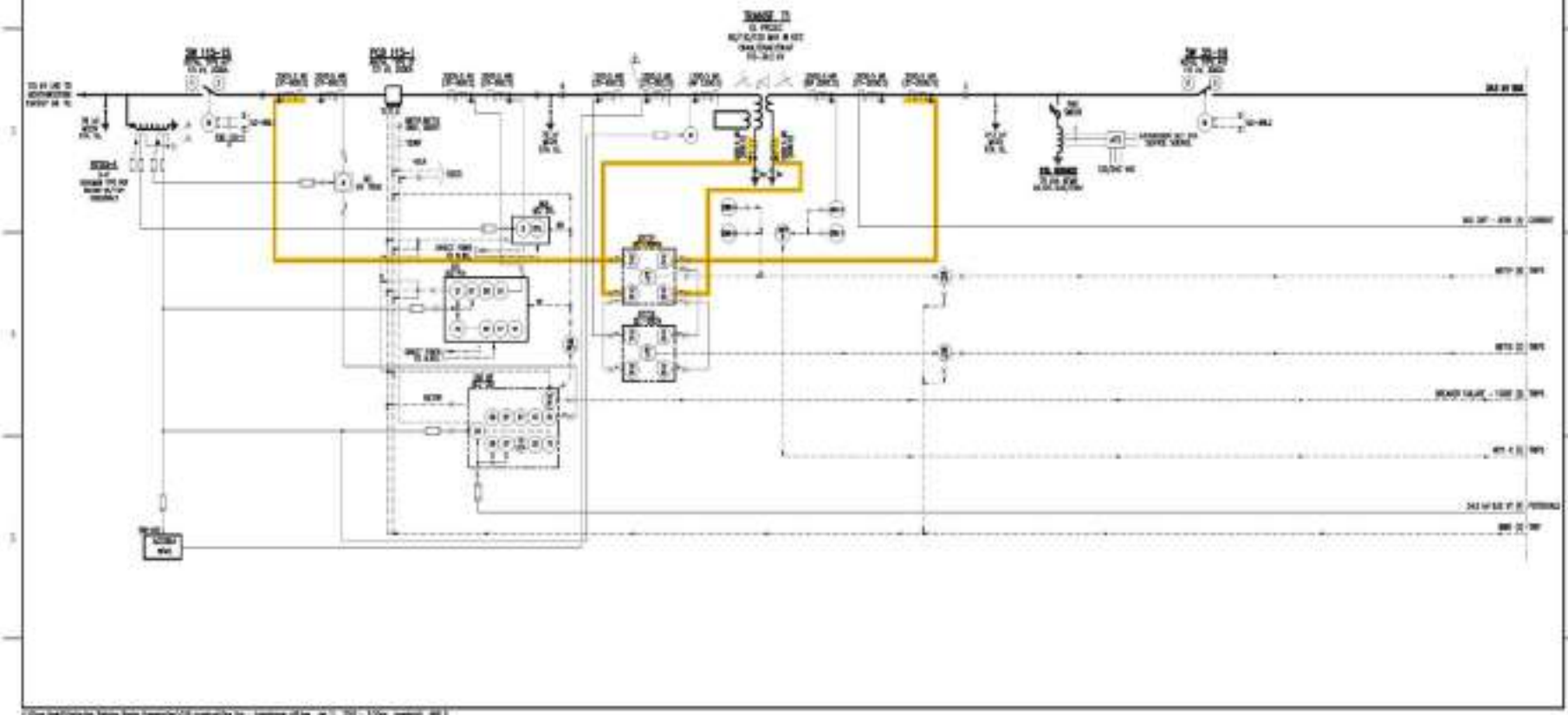

Correlation to Drawings

Three-line Diagrams

ECI
ELECTRICAL CONSULTANTS, INC.

Line

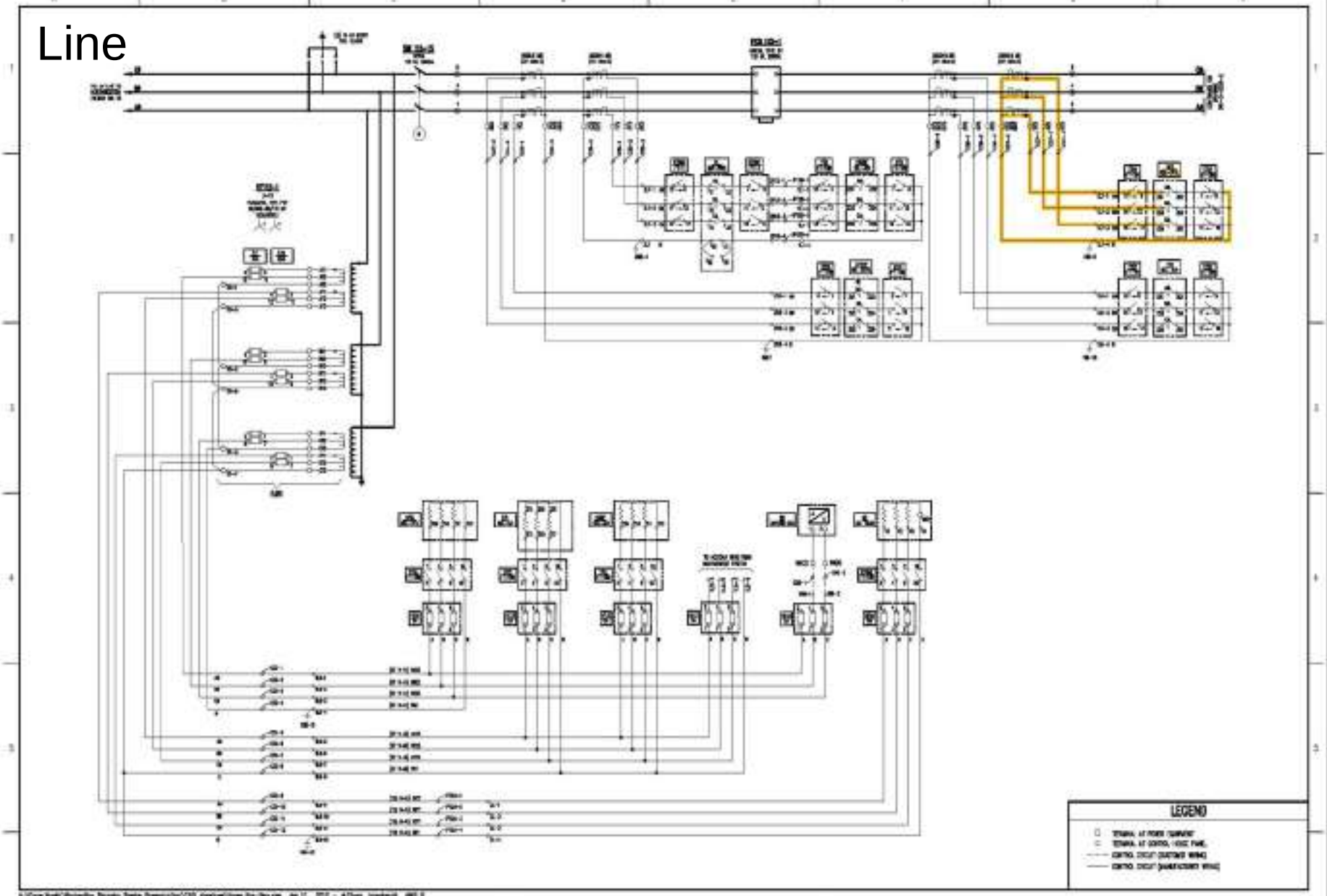

Correlation to Drawings

DC Schematics

ECI
ELECTRICAL CONSULTANTS, INC.

Simplified DC "Trip" Schematic

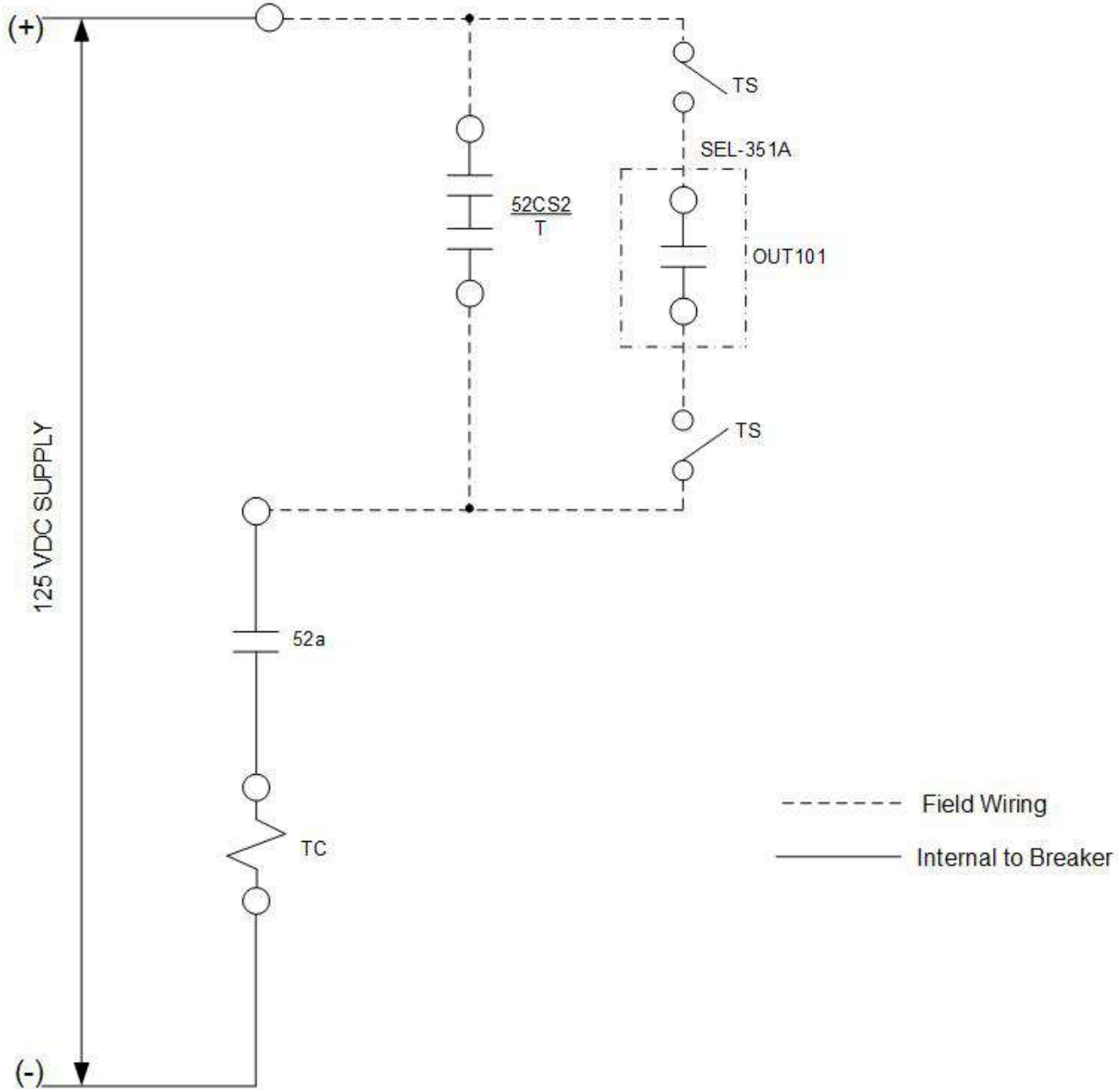

Other Types of Substation/Feeder Protection

- *Transformer Fuses*
- *Reclosers*
- *Sectionalizers*

ECI
ELECTRICAL CONSULTANTS, INC.

Transformer Fuse Protection

Transformer Fuse

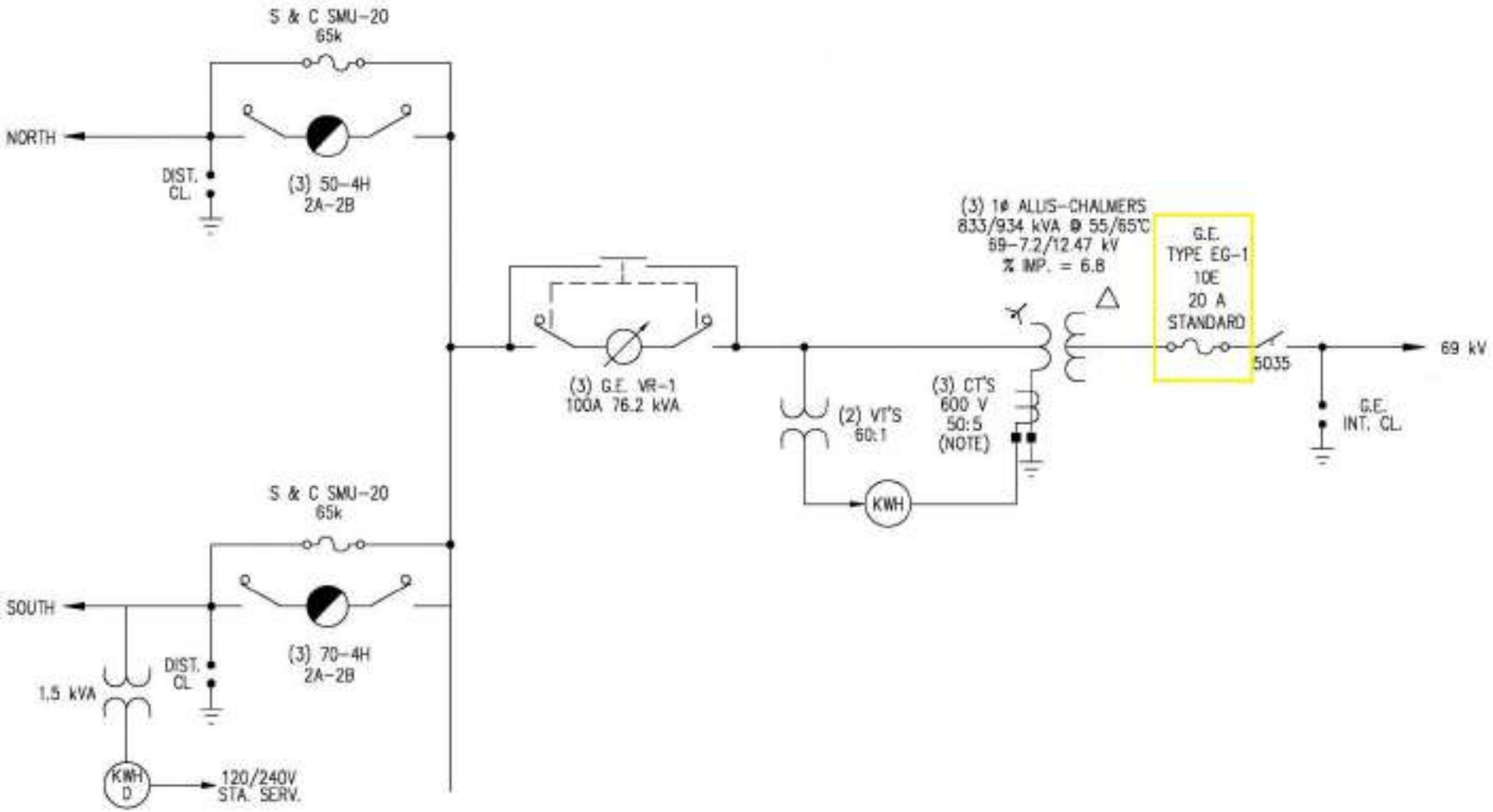

Recloser

Recloser Controller

ECI
ELECTRICAL CONSULTANTS, INC.

Recloser

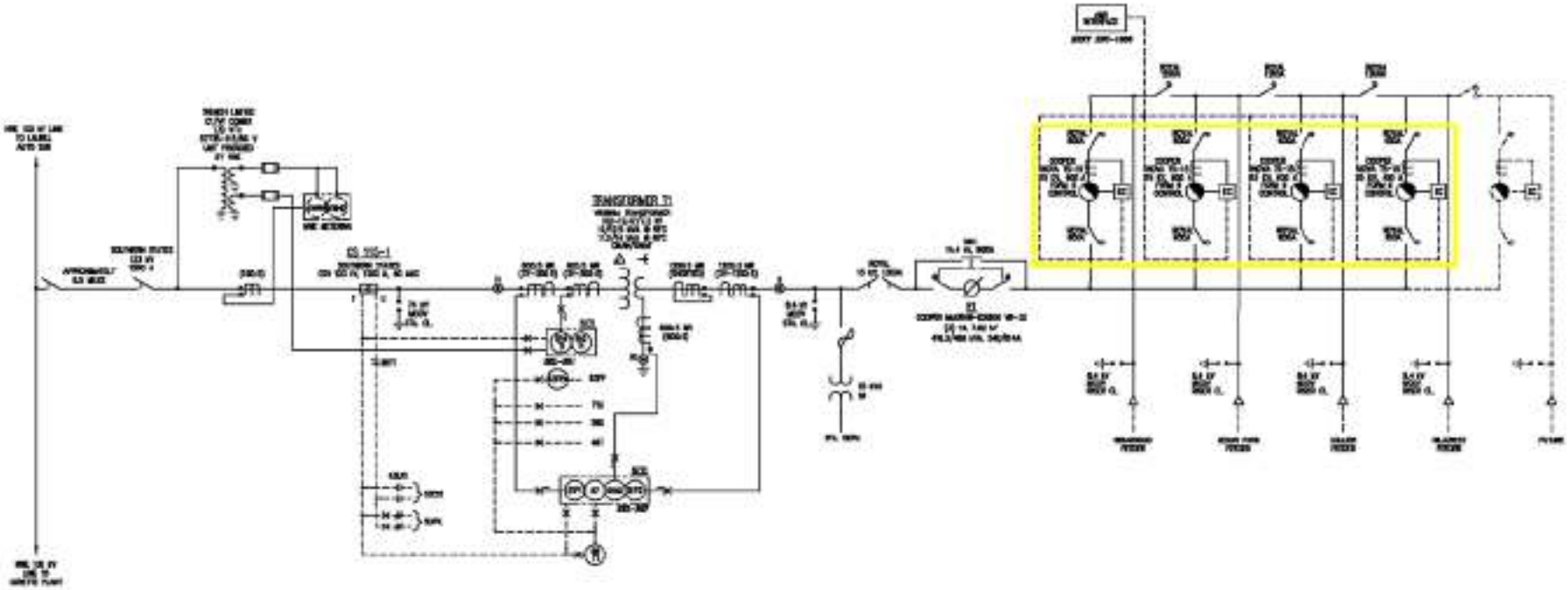

ECI
ELECTRICAL CONSULTANTS, INC.

Coordination Example

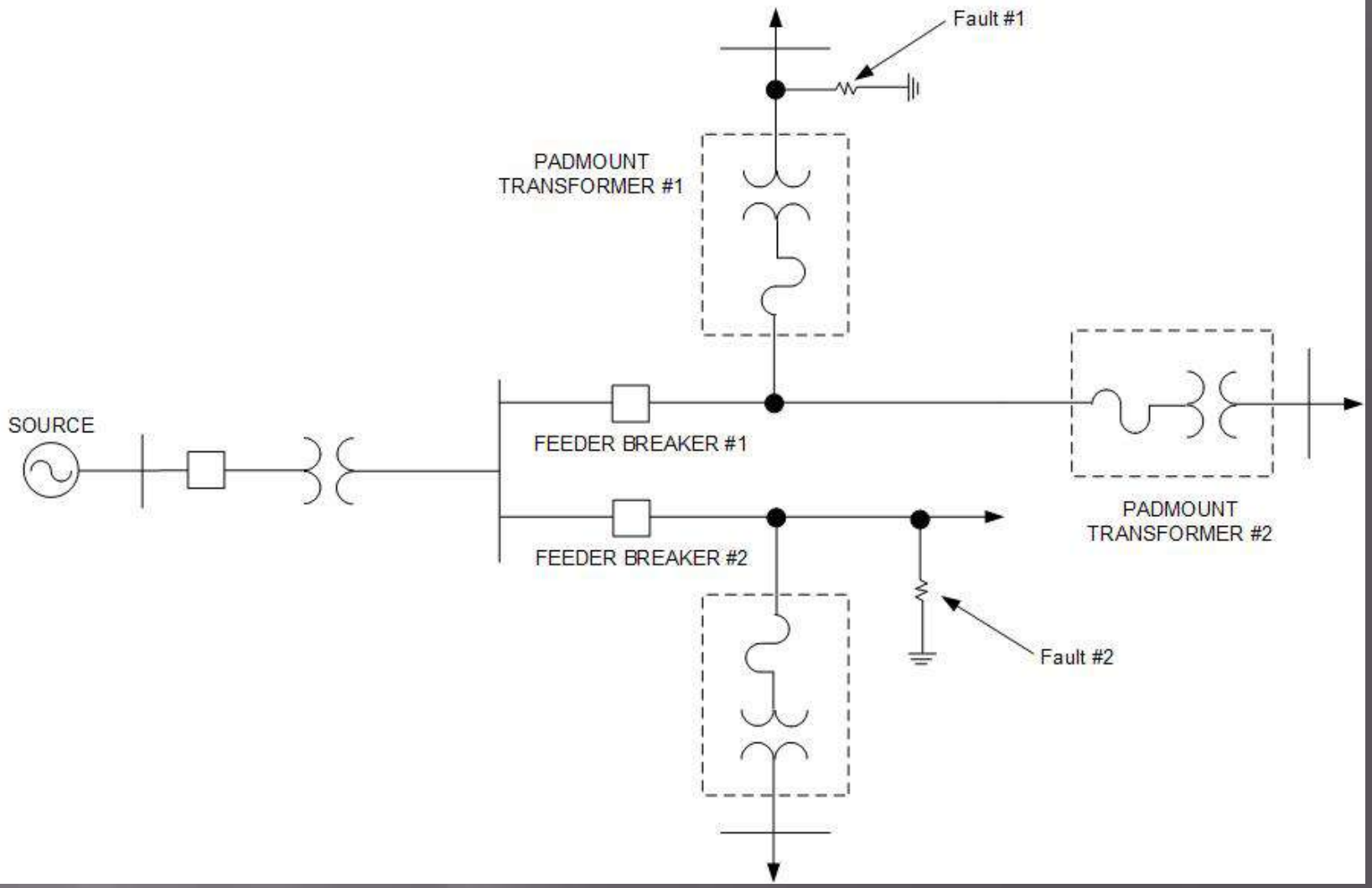

Time Current Curves

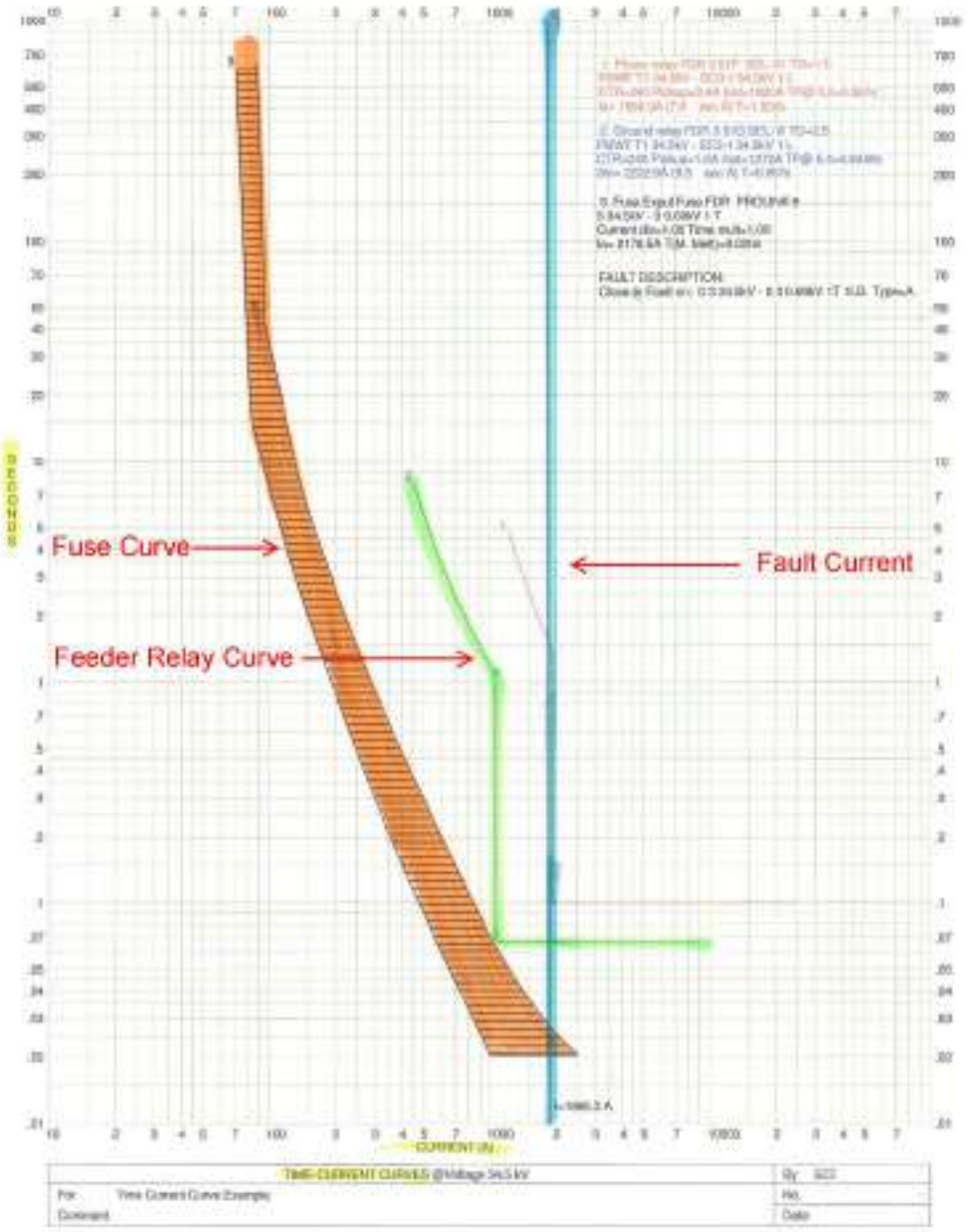

ECI
ELECTRICAL CONSULTANTS, INC.

ECI
ELECTRICAL CONSULTANTS, INC.

Questions?

ECI
ELECTRICAL CONSULTANTS, INC.